megamount RENOVA+

EASY *DYNAMIC* *LEVERLESS* SYSTEM FEATURING *AUTO POSITION RESTORE*

AUTO POSITION RESTORE

EASY DYNAMIC LEVERLESS

UP to 30”

BEAD BREAKING DISCS

BEAD PUSHING ARM

MOTO INVERTER

PEDAL

megamount

megamount

The new RENOVA+ combines the proven Contact-Free Easy Dynamic Leverless System with the new **AUTO POSITION RESTORE** *function for faster setup, repeatable tool positioning and improved ergonomics throughout the tyre set. High power and complete rim protection ensure easier, safer and more efficient operation.*

NEW

AUTO POSITION RESTORE

SET ONCE. RESTORE FOR THE NEXT WHEEL.

The intuitive multi-function console provides complete one-hand control, with all commands arranged for quick access and optimal ergonomics. Simultaneous activation of the return controls also brings all tools back to their rest position.

Dedicated buttons allow the operator to store and restore the positions of the three working tools when servicing the remaining wheels of the same tyre set, minimizing repeated repositioning and improving overall workflow.

Less time spent on repositioning tools

Repeatable and precise positioning for every wheel

Less operator intervention

For added safety, a dedicated reset control clears the stored positions automatically when the chuck is moved or after 20 minutes of inactivity, preventing unintended position restoration while the tools are engaged.

PATENTED

CONTACT-FREE EASY DYNAMIC LEVERLESS SYSTEM

The innovation that simplifies the operations and protects the rim

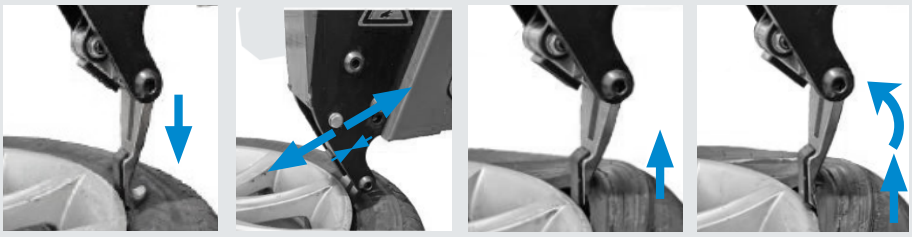

RENOVA+ adopts the innovative easy dynamic leverless system that, thanks to two synchronized tools, simplifies the operations. The first engages and removes the bead with extreme precision; then, the second aligns with the desmounting tool to facilitate installation of the first bead-all without applying any pressure to the tyre and avoiding any contact with the rim.

Combined bead removal with discs

Combined bead removal thanks to the movement of the two disc arms. The lower disc is always aligned with the assembly/disassembly tool. The upper disc is always tangent to the rim centre. The disc supports are produced using a micro-casting process, providing outstanding strength and long-term durability.

The adjustable mirror supplied helps with the precise positioning of the tools.

Locking capacity up to 30”

The electric clamping system ensures precise wheel positioning and **offers a clamping range between 10” and 30”**.
During all stages, the tool and the discs automatically align with the wheel by simply positioning the center post.

Additional bead pressing arm to facilitate assembly operations in the case of UHP or Run-flat wheels.
Adjustable working height.

Motoinverter

The new motoinverter delivers **progressive speed control from 0 to 16 rpm**, ensuring optimal performance on all tyres, including Run-Flat and UHP.

Pedal operated inflating device

Pedal-operated inflating system, manometer and CE-certified inflation pressure limiter (4.2 bar/60PSI).

On request (*factory assembled*)

Wheel lift

Perfect alignment, every time-controlled effortlessly with a single, smooth-action pedal.

Standard accessories

Protections for self centering device, pin to work with reversed rims, tool and pin, tool rollers and plastic lever

Optional accessories

Extendable bead-pusher with draw system

Electronic tyre inflator with digital pressure gauge up to 4.5 bar.

Led light kit

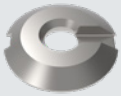

Light transport cone

Light transport adapter

Special cone for precise centering of rims of SUVs, vans and light commercial vehicles with center hole 89÷ 132.5 mm

Rubber protection for self centering device

Plastic protection for demounting tool (10 units)

Plastic roller for mounting tool (10 units)

WDK kit that includes lever, rim protection and mounting clamp RFT

Flange kit for reversed rims

On request (*factory assembled*)

Inflation Kit

External air jet inflation device for tubeless tyres; it facilitates the quick beading of any type of wheel

Lower fourth arm

to mount the first bead effortlessly, even on soft tires

Laser pointer

for a precise positioning of tool and discs

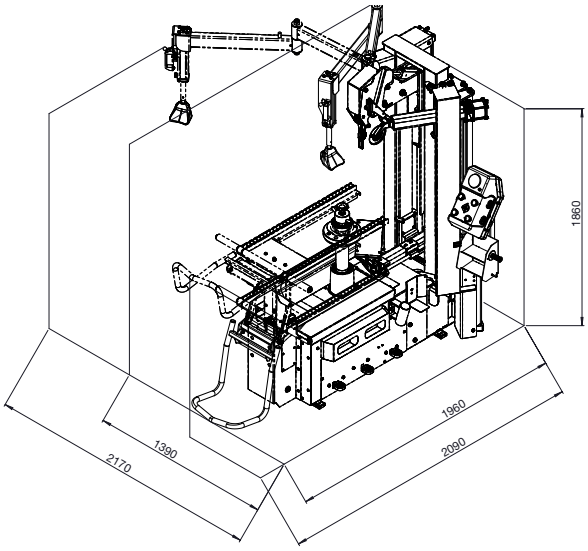

Technical Data

Clamping capacity	10" ÷ 30" (min ÷ max)
Max wheel diameter	1200 mm /47"
Max wheel width	380 mm /15"
Bead breaker force	12000N
1-Phase motor	1.5 kW (Inverter) 230V 50-60Hz
Turntable speed	0 -16 rpm (1ph - Inverter)
Operating pressure	8 - 10 bar (116 - 145 psi)
Noise level	< 70 ± 3 dB (A)
Net weight	600 kg

HOFMANN MEGAPLAN GmbH
Hüttenstrasse 7 - 67550 Worms - Germany
T +49 (0)6242 913 6666
hm-mail@hofmann-megaplan.com
www.hofmann-megaplan.com

AGHS41120